Reference:		**Client:**	
Project:		**Consultant:**	
Location:		**Contractor:**	
Date:		**Submitted by:**	

CVS
Manufacturing Excellence

Model XJ-12.44

Acoustical Louver

12" J Blade,Tested, AMCA Certified

Application:

The CVS Model XJ-12.44 is an AMCA Certified Acoustical Louver featuring 12" J style blades, designed to provide effective ventilation while significantly reducing noise transmission through air intake and exhaust openings. The louver is constructed with GI, SS or AL frames and incorporates acoustically treated J style blades filled with sound-absorbing insulation. This construction provides excellent acoustical performance, particularly at higher frequencies, while maintaining efficient airflow, low pressure drop, and reliable weather protection.

CERTIFIED RATING:

AMCA 511 & AMCA 500-L
ASTM E90 & ASTM E413

STANDARDS MET:

Building Code Standard: IBC & IMC
ASTM Standard: E1332, C423, C518, C612, A653, A240/240M and B209.

Features:

1. Free area is 25% based on a test sample of 48" × 48" (1220mm × 1220mm)
2. Acoustic infill material with Flame Spread Index ≤ 25
3. Acoustic infill material with Smoke Developed Index ≤ 30
4. Robust construction for long-term durability and reliable performance

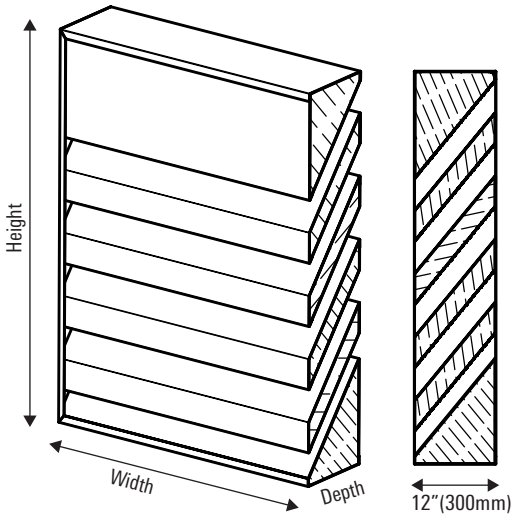

Standard Construction:

	Standard	Optional
Material	Galvanized Iron	Stainless Steel, Aluminium
Frame	18 ga	16 ga
Blade (Air Side)	18 ga	16 ga
Blade (Noise Side)	Perforated 22 ga	--------
Infill	Rockwool	Fiberglass
Mounting	Vertical	--------
Finish	Mill Finish	Powder Coating
Screen	N/A	1/2" x 1/2" (12.5 x 12.5) Bird Mesh
Assembly	Mechanically Fastened	Welded

Minimum & Maximum Sizes:

Model	Minimum Single Section	Maximum Single Section
XJ-12.44	12" x 30" (300 x 750)	80" x 120" (2000 x 3000)

All dimensions shown in inches,parentheses () indicate millimeters.
Note: Consult CVS for Multi-section Requirements.

Acoustical Performance:

Hz	125	250	500	1K	2K	4K	8K
TL(dB)	7	7	14	23	22	17	14
NR(dB)	13	13	20	29	28	23	20
STC Rating = 17				**OITC Rating = 12**			

Free Field Noise Reduction (NR): NR=TL + 6 db

Transmission Loss (TL): The difference in sound power level incident on and transmitted through the acoustical louver, expressed in decibels (dB).
Sound Transmission Class (STC): A single-number rating of airborne sound insulation performance. Higher STC values indicate better sound transmission reduction.
Outdoor-Indoor Transmission Class (OITC): A single-number rating of a building element's ability to reduce outdoor noise transmission. Higher OITC values indicate better outdoor sound insulation.

Optional Construction:

☐ **Security Bars** ☐ **Extended Sil** ☐ **Filter Provision**

☐ **Aluminium Filter**
Thickness: ☐ 25mm ☐ 50mm ☐ Customized _____

☐ **Stainless Steel** ☐ SS 304L ☐ SS 316L

☐ **Aluminium Frame** ☐ Mill Finish ☐ Anodized Finish

☐ **Finish Type** ☐ Mill ☐ Painting ☐ Powder Coating

Available Finish
☐ PVDF (Kynar 500) ☐ Super Durable Polyester
☐ Anti-Microbial ☐ Epoxy Primer + Top Coat

Heavy Gauge: ☐ 16 (1.5) ☐ 14 (2.0) ☐ 11 (3.0)

☐ **Factory Sleeve**
Optional Length: _____ (Std. 16" [400])
Gauge: ☐ 18 (1.2) ☐ 16 (1.5) ☑ 14 (2.0)

☐ **Flange Mount** ☐ Single Side ☐ Dual Side

☐ **Self Mount Flange (SMF)**
Flange Size: ☐ 20mm ☐ 30mm ☐ 40mm

☐ **Angle Mount** ☐ Single Side ☐ Dual Side
Angle Size: ☐ 30x30x3mm ☐ 40x40x4mm ☐ 50x50x5mm

☐ **Bird Mesh (mm)** ☐ 6x6 ☐ 12.5x12.5 ☐ 25x25

12" J Blade Acoustical Louver Model XJ-12.44	Cat Id: XJ-12.44	Rev.No: 00	Date: July 2026	Page: 1/2

1. As part of our continuous improvement program, we reserve the right to make further improvements without notice.

Submittal

PERFORMANCE DATA - Model XJ-12.44
Acoustical Louver

Pressure Drop Chart

Pressure drop varies depending on the louver size and airflow rate. Refer to the performance chart for detailed pressure drop values.

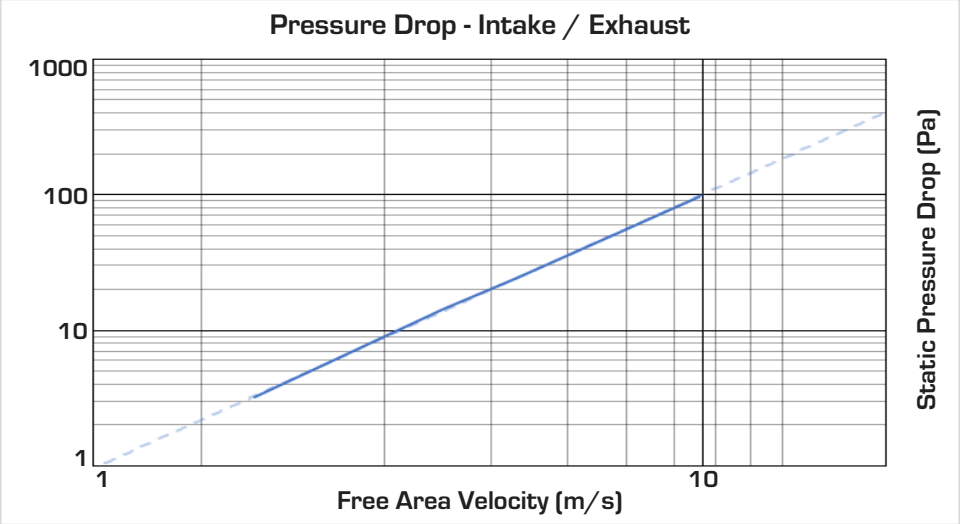

Tested in accordance with ANSI/AMCA 500-L, Figure 5.5.Performance data is based on a test specimen measuring 1220mm × 1220mm (48" × 48")

Free Area Chart (sqm)

mm		Width															
		750	900	1050	1200	1350	1500	1650	1800	1950	2100	2250	2400	2550	2700	2850	3000
Height	750	0.09	0.11	0.12	0.14	0.16	0.18	0.20	0.22	0.24	0.26	0.27	0.29	0.31	0.33	0.35	0.37
	900	0.13	0.16	0.19	0.21	0.24	0.27	0.30	0.33	0.35	0.38	0.41	0.44	0.47	0.49	0.52	0.55
	1050	0.17	0.21	0.25	0.29	0.32	0.36	0.40	0.44	0.47	0.51	0.55	0.58	0.62	0.66	0.70	0.73
	1200	0.22	0.26	0.31	0.36	0.40	0.45	0.50	0.54	0.59	0.64	0.68	0.73	0.78	0.82	0.87	0.92
	1350	0.22	0.26	0.31	0.36	0.40	0.45	0.50	0.54	0.59	0.64	0.68	0.73	0.78	0.82	0.87	0.92
	1500	0.26	0.32	0.37	0.43	0.49	0.54	0.60	0.65	0.71	0.77	0.82	0.88	0.93	0.99	1.05	1.10
	1650	0.30	0.37	0.44	0.50	0.57	0.63	0.70	0.76	0.83	0.89	0.96	1.02	1.09	1.15	1.22	1.29
	1800	0.35	0.42	0.50	0.57	0.65	0.72	0.80	0.87	0.95	1.02	1.10	1.17	1.24	1.32	1.39	1.47
	1950	0.35	0.42	0.50	0.57	0.65	0.72	0.80	0.87	0.95	1.02	1.10	1.17	1.24	1.32	1.39	1.47
	2100	0.39	0.48	0.56	0.64	0.73	0.81	0.90	0.98	1.06	1.15	1.23	1.32	1.40	1.48	1.57	1.65
	2250	0.44	0.53	0.62	0.72	0.81	0.90	1.00	1.09	1.18	1.28	1.37	1.46	1.56	1.65	1.74	1.84
	2400	0.48	0.58	0.68	0.79	0.89	0.99	1.10	1.20	1.30	1.40	1.51	1.61	1.71	1.81	1.92	2.02
	2550	0.48	0.58	0.68	0.79	0.89	0.99	1.10	1.20	1.30	1.40	1.51	1.61	1.71	1.81	1.92	2.02
	2700	0.52	0.63	0.75	0.86	0.97	1.08	1.19	1.31	1.42	1.53	1.64	1.75	1.87	1.98	2.09	2.20
	2850	0.57	0.69	0.81	0.93	1.05	1.17	1.29	1.42	1.54	1.66	1.78	1.90	2.02	2.14	2.27	2.39
	3000	0.61	0.74	0.87	1.00	1.13	1.26	1.39	1.52	1.66	1.79	1.92	2.05	2.18	2.31	2.44	2.57

amca WORLDWIDE CERTIFIED RATINGS SOUND AND AIR PERFORMANCE
AIR MOVEMENT AND CONTROL ASSOCIATION INTERNATIONAL, INC.®
amca INTERNATIONAL www.amca.org

Central Ventilation Systems certifies that the Acoustical Louver Model XJ-12.44 shown herein is licensed to bear the AMCA Seal. The ratings shown are based on tests and procedures performed in accordance with AMCA Publication 511 and comply with the requirements of the AMCA Certified Ratings Program.
The AMCA Certified Ratings Seal applies to sound and air performance ratings only.

NVLAP® TESTING
NVLAP LAB CODE 100227-0

Size Recommendation:
Louver dimensions are based on the wall opening size.
Single-section louver: Overall louver size shall be 3mm undersized relative to the wall opening.
Multi-section louver: Overall louver size shall be 6mm undersized relative to the wall opening.

Suggested Specification:
Furnish and install acoustical louvers as hereinafter specified where shown on plans or as described in schedules. Louvers shall have 45° stationary "J" blades within an 12" (300mm) deep frame. Components shall be factory assembled. Oversized units shall be supplied in factory-assembled sections for field assembly by the installing contractor to achieve the required overall dimensions.
Acoustical louvers shall be model CVS XJ-12.44, Galvanized Iron construction as follows:
FRAME: 12" (300mm) deep, 18 ga (1.2mm) nominal wall thickness.
BLADE: Stationary "J" blades, 45° angle, 18 ga (1.2mm) nominal wall thickness.
FINISH: Select finish specification from CVS Finishes brochure.

12" J Blade Acoustical Louver Model XJ-12.44	Cat Id: XJ-12.44	Rev.No: 00	Date: July 2026	Page: 2/2

2. As part of our continuous improvement program, we reserve the right to make further improvements without notice.